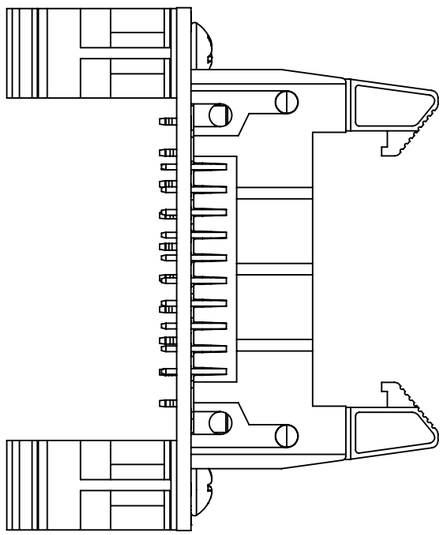

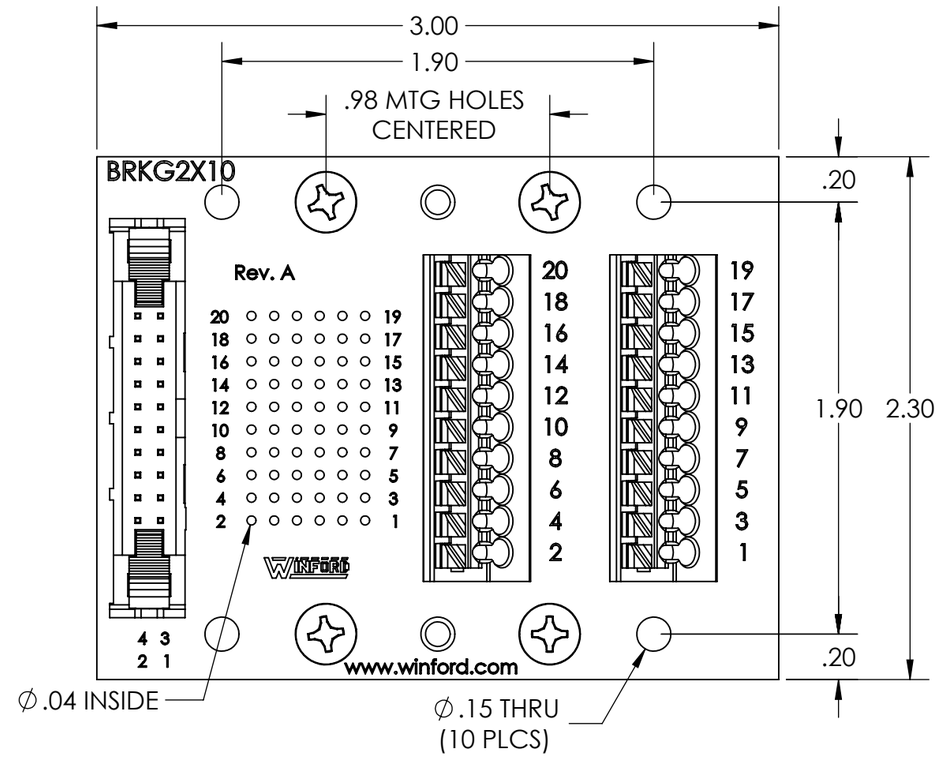

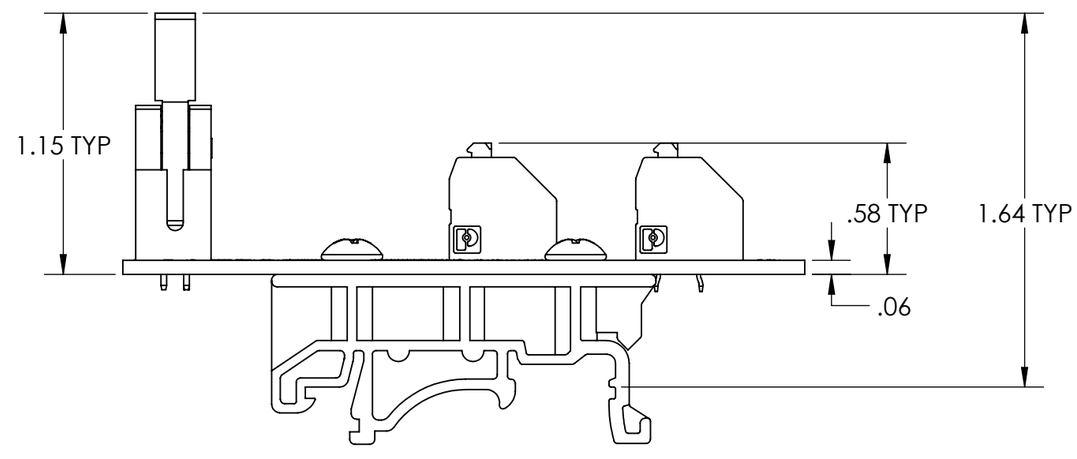

CONNECTOR PINOUT

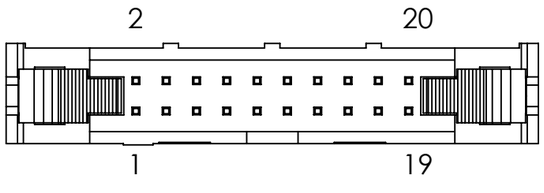

DIM: INCH	DATE: 03/29/2020	RoHS COMPLIANT: YES	DESCRIPTION: 2X10 0.1" Header Breakout
WINFORD ENGINEERING, LLC 4561 GARFIELD ROAD AUBURN, MI 48611			
www.winford.com	989-671-9721		PART NUMBER (S): BRKG2X10-L-DIN / PART REVISION: A